**M8 male 0° / M12 female 0° A-cod.**

PUR 3x0.25 gy UL/CSA 15m

**⚠ NOTICE ⚠**
**PRODUCT IS DISCONTINUED. PLEASE HAVE A LOOK AT THE ALTERNATIVE PRODUCTS.**

Male straight – female straight
M8 – M12, 3-pole
Art-No. 7005 - M12/M8 Lite - (plastic hexagonal screw) on request
Further cable lengths on request.
Plastic housings with good resistance against chemicals and oils.
The resistance to aggressive media should be individually tested for your application. Further details on request.

**Link naar het product**

**Afbeelding**

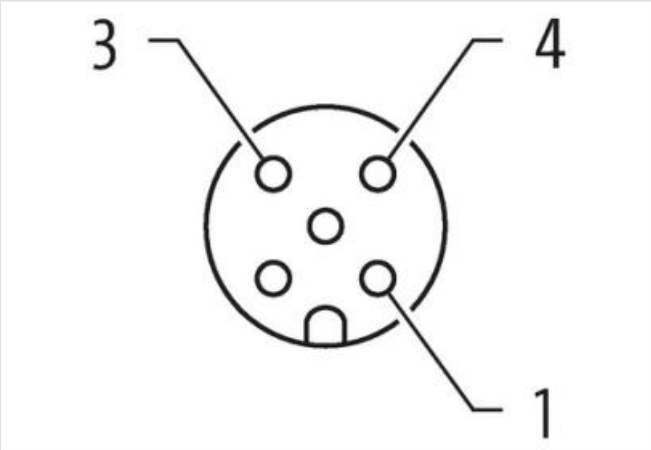


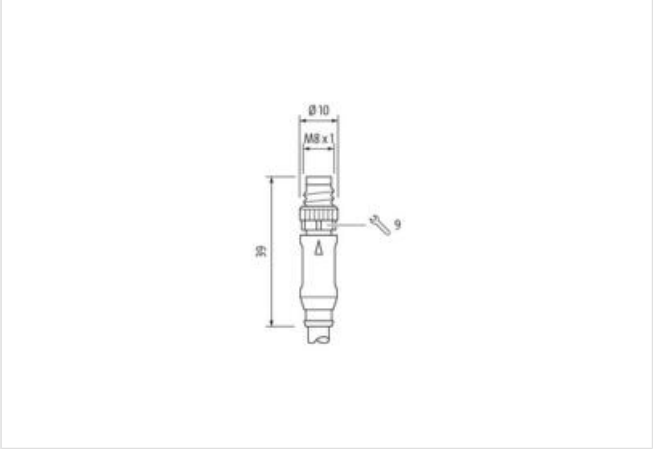


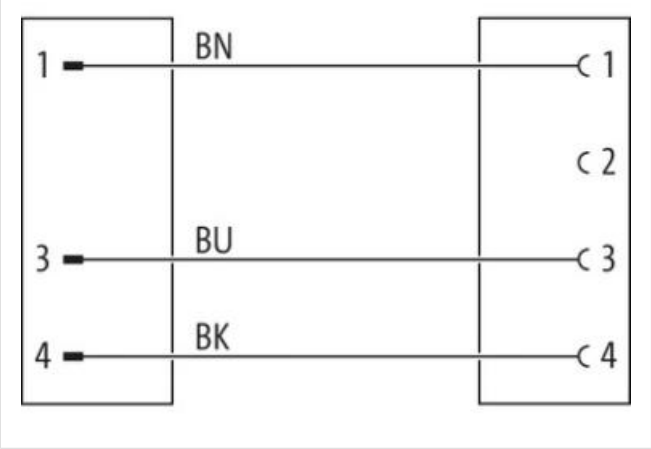


De informatie in dit datablad is met de grootst mogelijke zorg samengesteld.
Aansprakelijkheid beperkt tot grove nalatigheid voor de juistheid, volledigheid en actualiteit. Status: 2024-04-24

MURR ELEKTRONIK
stay connected

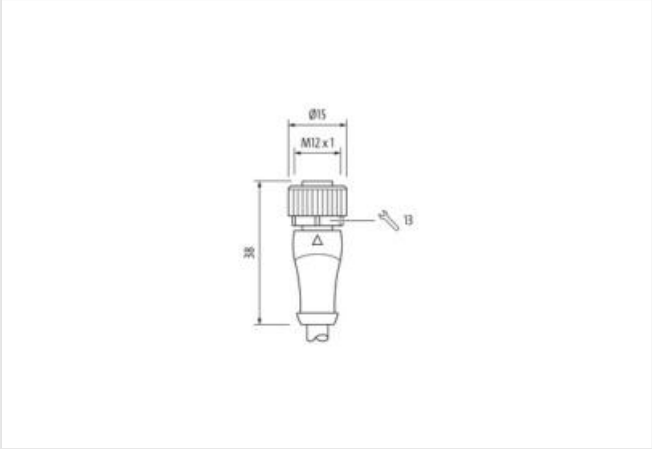


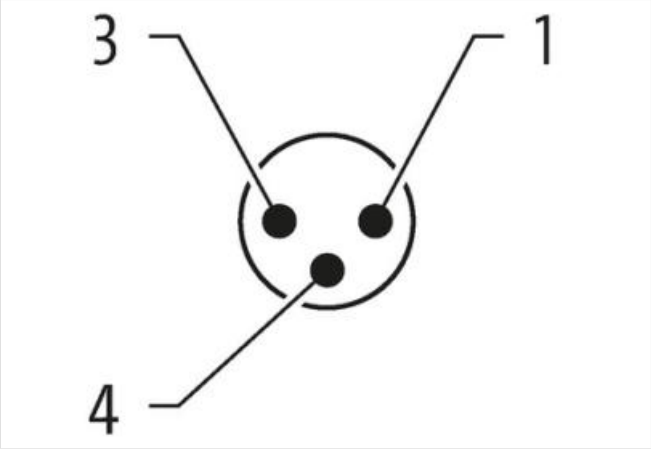


Product van afwijken van afbeelding

| | |
|---|---|
| Cable length | 15 m |
| **Side 1** | |
| Tightening torque | 0,4 Nm |
| Mounting method | inserted, screwed |
| Coating contact | gold plated |
| Family construction form | M8 |
| Thread | M8 x 1 |
| suitable for corrugated tube (internal Ø) | 6,5 mm |
| Coding | A |
| Material contact | Copper alloy |
| No. of poles | 3 |
| Width across flats | SW9 |
| **Side 2** | |
| Tightening torque | 0,6 Nm |
| Mounting method | inserted, screwed |
| Coating contact | gold plated |
| Family construction form | M12 |
| Thread | M12 x 1 |
| suitable for corrugated tube (internal Ø) | 10 mm |
| Coding | A |
| Material contact | Copper alloy |
| No. of poles | 3 |
| Width across flats | SW13 |
| **Commerciële gegevens** | |
| ECLASS-6.0 | 27061801 |
| ECLASS-6.1 | 27279218 |
| ECLASS-7.0 | 27279218 |
| ECLASS-8.0 | 27279218 |
| ECLASS-9.0 | 27060311 |
| ECLASS-10.1 | 27060311 |
| ECLASS-11.1 | 27060311 |
| ECLASS-12.0 | 27060311 |
| ETIM-5.0 | EC001855 |

De informatie in dit datablad is met de grootst mogelijke zorg samengesteld.
Aansprakelijkheid beperkt tot grove nalatigheid voor de juistheid, volledigheid en actualiteit. Status: 2024-04-24

| | |
|---|---|
| Douane tarief nummer | 85444290 |
| GTIN | 4048879817912 |
| Verpakkingseenheid | 1 |
| **Electrical data \| Supply** | |
| Operating voltage AC max. | 50 V |
| Operating voltage DC max. | 60 V |
| Operating voltage AC (UL-listed) | 30 V |
| Operating voltage DC (UL-listed) | 30 V |
| Current operating per contact max. | 4 A |
| **Device protection \| Electrical** | |
| Degree of protection (EN IEC 60529) | IP65, IP67, IP68, IP66K |
| Additional condition protection degree | inserted, screwed |
| Pollution Degree | 3 |
| Rated surge voltage | 1,5 kV |
| Material group (IEC 60664-1) | I |
| **Mechanical data \| Material data** | |
| Coating locking | Nickeled |
| Material gasket | FKM |
| Material housing | PUR |
| Locking material | Zinc die-casting |
| **Mechanical data \| Mounting data** | |
| Mounting method | inserted, screwed, Shaking protection |
| **Environmental characteristics \| Climatic** | |
| Operating temperature min. | -25 °C |
| Operating temperature max. | 85 °C |
| Additional condition temperature range | depending on cable quality |
| **Conformity** | |
| Product standard | DIN EN 61076-2-101 (M12), DIN EN 61076-2-114 (M8) |
| **Installation \| Cable** | |
| Cable identification | 220 |
| Cable Type | 2 |
| Jacket Color | gray |
| Type of Certificate | cURus |
| Amount stranding | 1 |
| Stranding | 3 wires twisted |
| wire arrangement | brown, black, blue |
| No. of bending cycles (C-track) | 2 Mio. @ 25 °C |
| Cable weigth | 26,62 g/m |
| Material jacket | PUR |
| Shore hardness jacket | 85 ± 5 Shore A |
| Freedom from ingredients (jacket) | lead-free, cadmium-free, CFC-free, silicone-free |
| Outer-diameter (jacket) | 4,3 mm |
| Tolerance outer diameter (sheath) | ± 5 % |
| Material wire insulation | PVC |
| Amount wires | 3 |
| Outer diameter insulation | 1,25 mm |
| Outer diameter tolerance core insulation | ± 5 % |
| Shore hardness wire insulation | 43 ± 5 Shore D |
| Material properties wire insulation | good machinability |
| Ingredient freeness wire insulation | lead-free, cadmium-free, CFC-free, silicone-free |
| Amount strands (wire) | 32 |

De informatie in dit datablad is met de grootst mogelijke zorg samengesteld.
Aansprakelijkheid beperkt tot grove nalatigheid voor de juistheid, volledigheid en actualiteit. Status: 2024-04-24

| | |
|---|---|
| Diameter of single wires | 0,1 mm |
| Conductor crosssection (wire) | 0,25 mm² |
| Material conductor wire | Stranded copper wire, bare |
| Conductor type (wire) | strand class 6 |
| Traversing distance (C-track) | 5 m @ 25 °C \| horizontal |
| Current load capacity (standard) | to DIN VDE 0298-4 |
| Current load capacity min. wire | 4,5 A |
| Electrical resistance line constant wire | 79 Ω/km @ 20 °C |
| Nominal voltage power AC max. | 300 V |
| Power frequency withstand voltage power (wire - jacket) | 2 kV @ 60 s |
| AC withstand voltage power (wire - wire) | 2 kV @ 60 s |
| Min. operating temperature (static) | -30 °C |
| Max. operating temperature (fixed) | 80 °C |
| Operating temperature min. (dynamic) | -5 °C |
| Operating temperature max. (dynamic) | 80 °C |
| Flame resistance | UL 1581 § 1090 \| IEC 60332-2-2 \| UL 1581 § 1100 FT2 |
| chemical resistance | Good, application-related testing |
| Gasoline resistance | Good, application-related testing |
| Oil resistance | DIN EN 60811-404 \| Good, application-related testing |
| Bending radius (fixed) | 10 x Outer diameter |
| Bending radius (dynamic) | 15 x Outer diameter |

De informatie in dit datablad is met de grootst mogelijke zorg samengesteld.
Aansprakelijkheid beperkt tot grove nalatigheid voor de juistheid, volledigheid en actualiteit. Status: 2024-04-24