MURR ELEKTRONIK
stay connected

M12 male 0° / M12 male 0° Y-cod. shielded

PUR AWG20/26 shielded bk UL/CSA+drag ch. 5m

Ethernet CAT5
Male straight – male straight
M12 – M12, 8-pole
Y-coded
shielded
Further cable lengths on request.
Plastic housings with good resistance against chemicals and oils.
The resistance to aggressive media should be individually tested for your application. Further details on request.

Link naar het product

Afbeelding

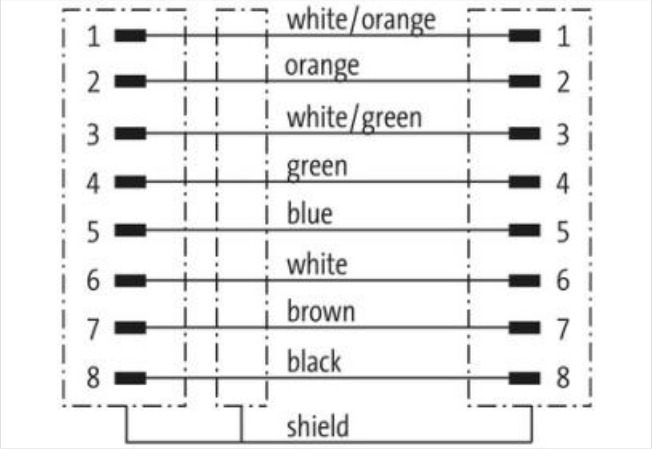

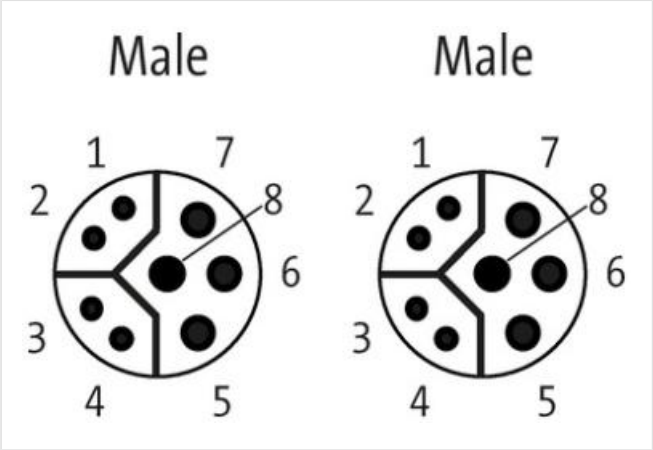

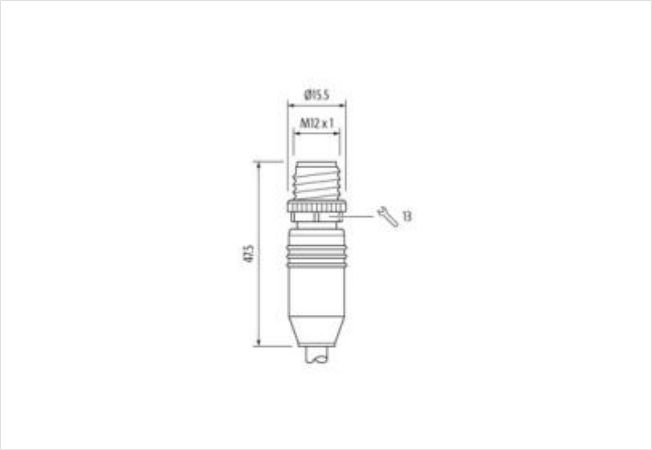

Product van afwijken van afbeelding

Cable length	5 m

Side 1

De informatie in dit datablad is met de grootst mogelijke zorg samengesteld.
Aansprakelijkheid beperkt tot grove nalatigheid voor de juistheid, volledigheid en actualiteit. Status: 2024-04-27

Tightening torque	0,6 Nm
Family construction form	M12
Thread	M12 x 1
Coding	Y
Material	PUR
Width across flats	SW13
Side 2	
Tightening torque	0,6 Nm
Family construction form	M12
Thread	M12 x 1
Coding	Y
Material	PUR
Commerciële gegevens	
ECLASS-6.0	27061801
ECLASS-6.1	27060307
ECLASS-7.0	27060307
ECLASS-8.0	27060307
ECLASS-9.0	27060307
ECLASS-10.1	27060307
ECLASS-11.1	27060307
ECLASS-12.0	27060307
ETIM-5.0	EC001855
Douane tarief nummer	85444290
GTIN	4048879519489
Verpakkingseenheid	1
Electrical data | Supply	
Operating voltage AC max.	50 V
Operating voltage DC max.	50 V
Operating voltage DC max. (UL-listed)	30 V
Operating current per data contact max.	0,5 A
Operating current per power contact max.	6 A
Industrial communication	
Transfer parameters	CAT5, Class D (ISO/IEC 11801:2002), (EN 50173-1)
Data transmission rate max.	100 MBit/s
Industrial communication | Ethernet functionality	
duplex	Full duplex
Device protection | Electrical	
Degree of protection (EN IEC 60529)	IP65, IP67
Additional condition protection degree	inserted, screwed
Pollution Degree	3
Rated surge voltage	0,8 kV
Material group (IEC 60664-1)	I
Mechanical data	
Contour for corrugated hose	without
Mechanical data | Material data	
Coating locking	Nickeled
Locking material	Zinc die-casting
Mechanical data | Mounting data	
Mounting method	inserted, screwed, Shaking protection
Environmental characteristics | Climatic	

De informatie in dit datablad is met de grootst mogelijke zorg samengesteld.
Aansprakelijkheid beperkt tot grove nalatigheid voor de juistheid, volledigheid en actualiteit. Status: 2024-04-27

Operating temperature min.	-25 °C
Operating temperature max.	85 °C
Additional condition temperature range	depending on cable quality
Conformity	
Product standard	DIN EN 61076-2-101 (M12)
Installation | Cable	
Cable identification	805
Jacket Color	black
Type of Certificate	cURus
Amount stranding	1
Stranding	4 wires around 1 Filler twisted
Amount stranding (type 2)	1
Stranding (type 2)	4 wires around Stranding combination with Filler twisted
Cable shielding (type)	copper braid, tinned
Cable shielding (coverage)	85 %
Pair shielding (type)	copper braid, tinned
Banding	Fleece, Foil
Filler	yes
wire arrangement	black, brown, white, blue, (orange-white, green, orange, green-white)
No. of bending cycles (C-track)	5 Mio.
Cable weigth	107,8 g/m
Material jacket	PUR
Shore hardness jacket	90 ± 5 Shore A
Freedom from ingredients (jacket)	lead-free, cadmium-free, CFC-free, halogen-free, silicone-free
Outer-diameter (jacket)	8,1 mm
Tolerance outer diameter (sheath)	± 5 %
Material wire insulation	PP
Amount wires	4
Outer diameter insulation	1,5 mm
Outer diameter tolerance core insulation	± 5 %
Shore hardness wire insulation	55 ± 5 Shore D
Ingredient freeness wire insulation	lead-free, cadmium-free, CFC-free, halogen-free, silicone-free
Amount strands (wire)	19
Diameter of single wires	20 AWG
Conductor crosssection (wire)	20 AWG
Material conductor wire	Stranded copper wire, bare
Material wire insulation (Data)	PP
Outer diameter wire insulation (Data)	1,1 mm
Tolerance outer diameter wire insulation (data)	± 5 %
Shore hardness wire insulation (Data)	55 ± 5 Shore D
Ingredient freeness wire insulation (Data)	lead-free, cadmium-free, CFC-free, halogen-free, silicone-free
Amount wires (Data)	4
Amount strands wire (Data)	19
Diameter of single wires (Data)	26 AWG
Conductor crosssection wire (Data)	26 AWG
Material conductor wire (Data)	Stranded copper wire, bare
Traversing distance (C-track)	5 m
Current load capacity (standard)	to DIN VDE 0298-4
Current load capacity min. wire	5,9 A
Current load capacity min. Wire (Data)	2 A
Characteristic impedance	100 Ω ± 15 % @ 1 MHz
Electrical resistance line constant wire	35 Ω/km
Electrical resistance coating wire (Data)	140 Ω/km

De informatie in dit datablad is met de grootst mogelijke zorg samengesteld.
Aansprakelijkheid beperkt tot grove nalatigheid voor de juistheid, volledigheid en actualiteit. Status: 2024-04-27

Nominal voltage power AC max.	60 V
Electrical capacity line constant (wire - wire) (power)	52000 pF/km
AC withstand voltage power (wire - shield)	1 kV @ 60 s
Power frequency withstand voltage power (wire - jacket)	1 kV @ 60 s
AC withstand voltage power (wire - wire)	1 kV @ 60 s
Min. operating temperature (static)	-50 °C
Max. operating temperature (fixed)	80 °C / 90 °C @ 10000 h Operation
Operating temperature min. (dynamic)	-40 °C
Operating temperature max. (dynamic)	80 °C / 90 °C @ 10000 h Operation
Flame resistance	UL 1581 § 1090 | UL 1581 § 1100 FT2 | IEC 60332-2-2
chemical resistance	Good, application-related testing
Gasoline resistance	Good, application-related testing
Oil resistance	DIN EN 60811-404 | Good, application-related testing
Bending radius (installation)	x Outer diameter
Bending radius (fixed)	5 x Outer diameter
Bending radius (dynamic)	10 x Outer diameter
No. of torsion cycles	2 Mio.
Torsion speed	35 cycles/min
Torsion stress	± 30 °/m

De informatie in dit datablad is met de grootst mogelijke zorg samengesteld.
Aansprakelijkheid beperkt tot grove nalatigheid voor de juistheid, volledigheid en actualiteit. Status: 2024-04-27