MURR ELEKTRONIK
stay connected

**IO-Link / analog converter**

AO I 4 ... 20mA, M12, straight

IO-Link / analog converter
AO I 4...20mA, M12
16Bit, IP65/67, IO-Link V1.1, Class A

Link naar het product

**Afbeelding**

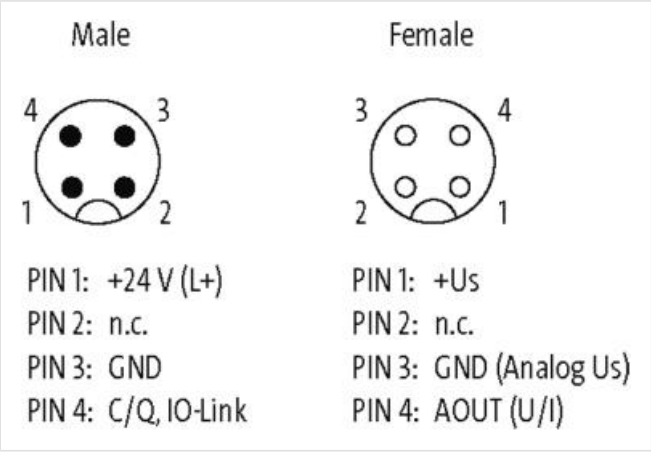


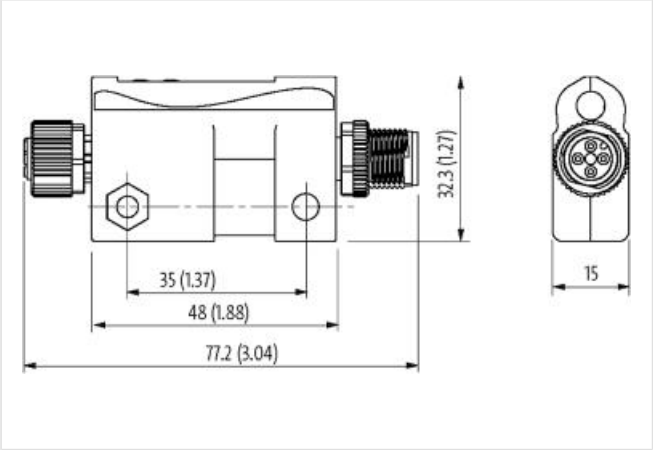


Product van afwijken van afbeelding

**Commerciële gegevens**

| | |
|---|---|
| ECLASS-6.0 | 27242601 |
| ECLASS-6.1 | 27242602 |
| ECLASS-7.0 | 27242602 |
| ECLASS-8.0 | 27242602 |
| ECLASS-9.0 | 27242602 |
| ECLASS-10.1 | 27242602 |
| ECLASS-11.1 | 27242602 |

De informatie in dit datablad is met de grootst mogelijke zorg samengesteld.
Aansprakelijkheid beperkt tot grove nalatigheid voor de juistheid, volledigheid en actualiteit. Status: 2024-04-24

| | |
|---|---|
| ECLASS-12.0 | 27242602 |
| ETIM-5.0 | EC001596 |
| Douane tarief nummer | 85437090 |
| GTIN | 4048879588225 |
| Verpakkingseenheid | 1 |
| **Electrical data \| Supply** | |
| Operating voltage DC | 24 V |
| Operating voltage DC min. | 18 V |
| Operating voltage DC max. | 30 V |
| Norm operating voltage | EN 61131-2 |
| Operating voltage UA DC | 24 V |
| Current consumption max. | 19 mA |
| **Electrical data \| Output** | |
| Type Output | 2-, 3-, 4-wire technology |
| Output current max. | 0,2 A |
| Parameterizable input averaging filter process data | yes |
| Conversion time analog output max. | 5 ms |
| **Industrial communication \| IO-Link** | |
| IO-Link process data length output | 2 Bytes |
| IO-Link revision ID | V1.1 |
| IO-Link cycle time min. | 2,3 ms |
| IO-Link transmission rate | COM2 (38.4 kbit/s) |
| Port Class | A |
| **Diagnostics** | |
| Diagnostic via IO-Link | yes |
| Diagnostic via LED | yes |
| IO-Link events | Device defect, Overcurrent sensor supply, Overtemperature, Overvoltage supply, Undervoltage supply, cable break sensor, lower limit, upper limit, Übersteuerung |
| LED display | Ethernet connection/data traffic |
| Temperature control | yes |
| **Device protection \| Electrical** | |
| Degree of protection (EN IEC 60529) | IP65, IP67 |
| Invers-polarity protection | yes |
| Short circuit protection sensor supply | yes |
| Short-circuit protection output | yes |
| Resistance to loads with regenerative power | yes |
| Over voltage protection | yes |
| **Mechanical data \| Material data** | |
| Material housing | Plastic |
| **Mechanical data \| Mounting data** | |
| Height | 32,3 mm |
| Width | 77,2 mm |
| Depth | 15 mm |
| **Environmental characteristics \| Climatic** | |
| Operating temperature min. | -30 °C |
| Operating temperature max. | 70 °C |
| Storage temperature min. | -40 °C |
| Storage temperature max. | 85 °C |
| **Connection type 2** | |
| Connection type 1 | AO |

De informatie in dit datablad is met de grootst mogelijke zorg samengesteld.
Aansprakelijkheid beperkt tot grove nalatigheid voor de juistheid, volledigheid en actualiteit. Status: 2024-04-24

| | |
|---|---|
| Connection type 2 | IO-Link AO |
| Family construction form | M12 |
| Gender | female |
| Color contact carrier | black |
| Coding | A |
| No. of poles | 4 |
| PIN 1 | + US |
| PIN 2 | n.c. |
| PIN 3 | 0 V (Analog US) |
| PIN 4 | AOut (U / I) |
| Family construction form | M12 |
| Gender | male |
| Color contact carrier | black |
| Coding | A |
| No. of poles | 4 |
| PIN 1 | 24 V DC (L +) |
| PIN 2 | n.c. |
| PIN 3 | 0 V (L -) |
| PIN 4 | C / Q / IO-Link |

De informatie in dit datablad is met de grootst mogelijke zorg samengesteld.
Aansprakelijkheid beperkt tot grove nalatigheid voor de juistheid, volledigheid en actualiteit. Status: 2024-04-24