MURR ELEKTRONIK
stay connected

## MVK+MPNIO DI8 DO8 POF IRT

Push Pull galvanic separation

Digital inputs/outputs
DI8 DO8 (IRT)
Ethernet 10/100 Mbit/s; 2× SCRJ45 POF Push Pull
Push Pull Power connector, max. 12 A
M12, 5-pole, A-coded
Connection cables are in the online shop under "Connection Technology".
Housing fully potted.

Link naar het product

### Afbeelding

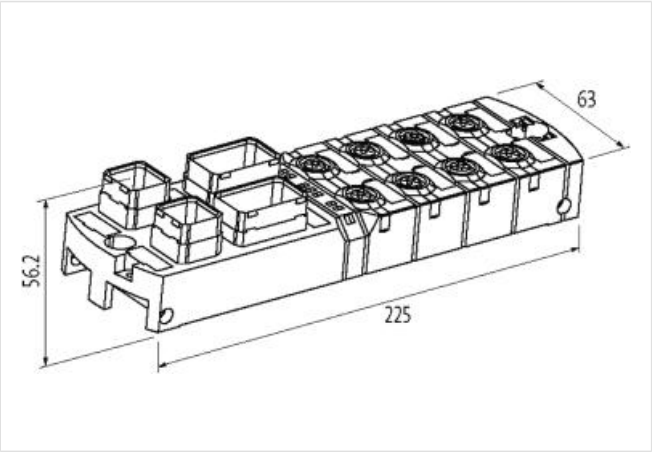


Product van afwijken van afbeelding

### Commerciële gegevens

| | |
|---|---|
| ECLASS-6.0 | 27242604 |
| ECLASS-6.1 | 27242604 |
| ECLASS-7.0 | 27242604 |
| ECLASS-8.0 | 27242604 |
| ECLASS-9.0 | 27242604 |
| ECLASS-10.1 | 27242604 |
| ECLASS-11.1 | 27242604 |
| ECLASS-12.0 | 27242604 |
| ETIM-5.0 | EC001599 |
| Douane tarief nummer | 85389099 |
| GTIN | 4048879553179 |
| Verpakkingseenheid | 1 |

### Electrical data | Supply

| | |
|---|---|
| Norm operating voltage | EN 61131-2 |
| Operating voltage US DC | 24 V |
| Operating voltage UA DC | 24 V |
| Total current UA max. | 12 A |
| Total current US max. | 12 A |

De informatie in dit datablad is met de grootst mogelijke zorg samengesteld.
Aansprakelijkheid beperkt tot grove nalatigheid voor de juistheid, volledigheid en actualiteit. Status: 2024-04-25

MURR ELEKTRONIK
stay connected

| | |
|---|---|
| **Electrical data \| Input** | |
| Overload resistant | yes |
| Short-circuit protected | yes |
| Type input | PNP, for 3-wire sensors or mechanical switches |
| Sensor current US per input max. | 0,2 A |
| **Electrical data \| Output** | |
| Overload resistant | yes |
| Short-circuit protected | yes |
| Output current per pin max. | 2 A |
| Lamp load | 10 W |
| **Industrial communication** | |
| Supported protocol | PROFINET |
| **Industrial communication \| Profinet** | |
| Number of active connections (IO controller) max. | 2 |
| FSU (Fast-Start-Up) | yes |
| Fast start up time max. | 0,5 s |
| IRT (network communication) | yes |
| MRP client | yes |
| PROFINET Netload Class | III |
| PROFINET addressing | DCP |
| PROFINET conformance class | C |
| PROFINET specification | V2.2 |
| Shared device/input | yes |
| **Diagnostics** | |
| Actuator warning | per channel via LED and BUS |
| Diagnostic | No voltage, Under voltage |
| Diagnostic via BUS | per module and channel |
| Diagnostic via LED | per module and channel |
| Short circuit diagnosis | yes |
| LED display | Ethernet connection/data traffic |
| Cable break | per port |
| Overload diagnosis | yes |
| **Device protection \| Electrical** | |
| Degree of protection (EN IEC 60529) | IP67 |
| **Mechanical data \| Mounting data** | |
| Suitable for mounting type | 2-hole screw mounting |
| Height | 56,2 mm |
| Width | 63 mm |
| Depth | 225 mm |
| **Environmental characteristics \| Climatic** | |
| Operating temperature min. | 0 °C |
| Operating temperature max. | 55 °C |
| Storage temperature min. | -20 °C |
| Storage temperature max. | 70 °C |
| **Connection type 4** | |
| Connection type 1 | X0-X3 |
| Connection type 2 | X4-X7 |
| Connection type 3 | XD1, XD2 |
| Connection type 4 | XF1, XF2 |
| Family construction form | M12 |

De informatie in dit datablad is met de grootst mogelijke zorg samengesteld.
Aansprakelijkheid beperkt tot grove nalatigheid voor de juistheid, volledigheid en actualiteit. Status: 2024-04-25

| | |
|---|---|
| Gender | female |
| Color contact carrier | black |
| Coding | A |
| No. of poles | 5 |
| PIN 1 | n.c. |
| PIN 2 | DO |
| PIN 3 | 0 V (UA) |
| PIN 4 | DO |
| PIN 5 | PE |
| Family construction form | M12 |
| Gender | female |
| Color contact carrier | black |
| Coding | A |
| No. of poles | 5 |
| PIN 1 | 24 V DC (US) |
| PIN 2 | DI |
| PIN 3 | 0 V (US) |
| PIN 4 | DI |
| PIN 5 | PE |
| Family construction form | Push Pull |
| Gender | male |
| Color contact carrier | green |
| No. of poles | 5 |
| PIN 1 | 24 V DC (US) |
| PIN 2 | 0 V (US) |
| PIN 3 | 24 V DC (UA) |
| PIN 4 | 0 V (UA) |
| PIN 5 | PE |
| Family construction form | POF SC-RJ |
| Gender | female |
| Color contact carrier | black |
| No. of poles | 2 |
| PIN 1 | RD |
| PIN 2 | TD |

De informatie in dit datablad is met de grootst mogelijke zorg samengesteld.
Aansprakelijkheid beperkt tot grove nalatigheid voor de juistheid, volledigheid en actualiteit. Status: 2024-04-25