stay connected

MVP12, 4XM12, 5POLE, PLUGGABLE CABLE

3.0m PUR/PVC 8x0,34+5x0,75

4-way, 5-pole
PUR/PVC
3.0 m
potentially separated
with LED for digital PNP-signals 24 V DC
Further cable lengths on request.

Link naar het product

Afbeelding

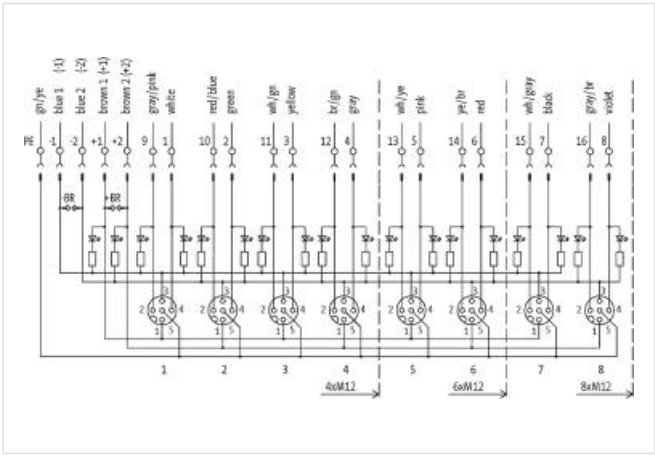

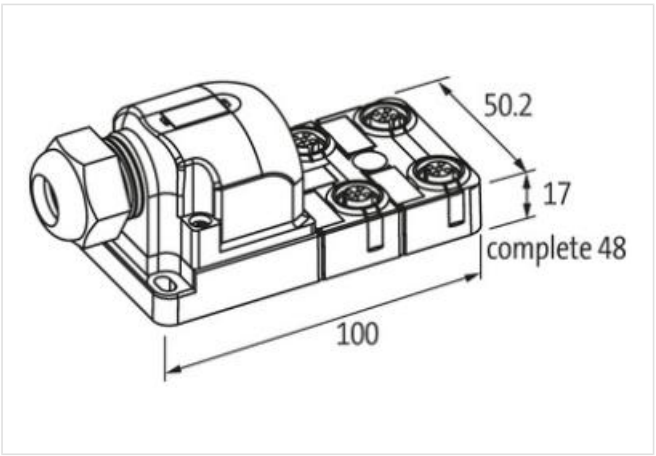

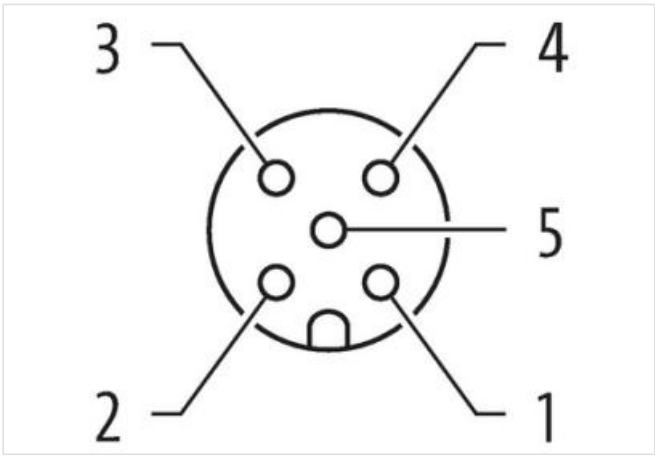

Product van afwijken van afbeelding

Commerciële gegevens

ECLASS-6.0	27279219
ECLASS-6.1	27279219
ECLASS-7.0	27279219

De informatie in dit datablad is met de grootst mogelijke zorg samengesteld.
Aansprakelijkheid beperkt tot grove nalatigheid voor de juistheid, volledigheid en actualiteit. Status: 2024-04-24

MURR ELEKTRONIK
stay connected

ECLASS-8.0	27279219
ECLASS-9.0	27440108
ECLASS-10.1	27440108
ECLASS-11.1	27440108
ECLASS-12.0	27440108
ETIM-5.0	EC002585
Douane tarief nummer	85369010
GTIN	4048879064316
Verpakkingseenheid	1
Electrical data | Supply	
Operating voltage DC	24 V
Operating voltage DC min.	18 V
Operating voltage DC max.	30 V
Current operating per contact max.	4 A
Total current max.	8 A
Industrial communication	
Number of signals per port	2
Installation | Connection	
Mounting set	M12 x 1
Device protection | Electrical	
Degree of protection (EN IEC 60529)	IP65, IP67
Additional condition protection degree	inserted, screwed
Device protection | Media	
Flame resistance	flame retardant
Mechanical data | Material data	
Material housing	PBT
Mechanical data | Mounting data	
Mounting method	Schraubgewinde
Height	100 mm
Width	50,2 mm
Depth	17 mm
Environmental characteristics | Climatic	
Operating temperature min.	-20 °C
Operating temperature max.	80 °C
Installation | Cable	
Cable identification	374
Cable Type	2
Jacket Color	gray
Type of Certificate	cURus
STOOW style jacket	Hybrid, Signal, Power
Amount stranding	1
Stranding	4 wires twisted
Amount stranding (type 2)	1
Stranding (type 2)	9 wires around Stranding combination twisted
wire arrangement	gray-pink, white, red-blue, green, (green-yellow, brown 1, blue 1, brown 2, blue 2, green-white, yellow, brown-green, gray)
No. of bending cycles (C-track)	2 Mio. @ 25 °C
Cable weigth	140,94 g/m
Material jacket	PUR
Shore hardness jacket	87 ± 5 Shore A
Freedom from ingredients (jacket)	lead-free, cadmium-free, CFC-free, silicone-free

De informatie in dit datablad is met de grootst mogelijke zorg samengesteld.
Aansprakelijkheid beperkt tot grove nalatigheid voor de juistheid, volledigheid en actualiteit. Status: 2024-04-24

MURR ELEKTRONIK
stay connected

Outer-diameter (jacket)	9,2 mm
Tolerance outer diameter (sheath)	± 5 %
Material inner jacket	PVC
Color (inner jacket)	gray
Material wire insulation	PVC
Amount wires	8
Outer diameter insulation	1,3 mm
Outer diameter tolerance core insulation	± 5 %
Shore hardness wire insulation	43 ± 5 Shore D
Material properties wire insulation	good machinability
Ingredient freeness wire insulation	lead-free, cadmium-free, CFC-free, silicone-free
Amount strands (wire)	19
Diameter of single wires	0,15 mm
Conductor crosssection (wire)	0,34 mm²
Material conductor wire	Stranded copper wire, bare
Conductor type (wire)	Strand class 5
Material wire insulation (Power)	PVC
Outer diameter wire insulation (Power)	1,8 mm
Tolerance outer diameter wire insulation (Power)	±5 %
Shore hardness wire insulation (Power)	43±5 Shore D
Material properties wire insulation (Power)	good machinability
Ingredient freeness wire insulation (Power)	lead-free, cadmium-free, CFC-free, silicone-free
Printing colour wire insulation (Power)	white (isolation blue), white (isolation brown)
Amount wires (Power)	5
Amount strands wire (Power)	42
Diameter of single wires (Power)	0,15 mm
Wire conductor cross section (Power)	0,75 mm²
Material conductor wire (Power)	Stranded copper wire, bare
Conductor type wire (Power)	strand class 6
Traversing distance (C-track)	5 m @ 25 °C | horizontal
Current load capacity (standard)	to DIN VDE 0298-4
Current load capacity min. wire	4 A
Electrical resistance line constant wire	57 Ω/km @ 20 °C
Electrical resistance coating wire (Power)	26 Ω/km @20 °C
Loop resistance	7,8 A
Max. rated voltage power (conductor - ground)	300 V
Max. rated voltage power (conductor - conductor)	300 V
Power frequency withstand voltage power (wire - jacket)	2 kV @ 60 s
AC withstand voltage power (wire - wire)	2 kV @ 60 s
Min. operating temperature (static)	-30 °C
Max. operating temperature (fixed)	80 °C
Operating temperature min. (dynamic)	-5 °C
Operating temperature max. (dynamic)	70 °C
Flame resistance	UL 1581 § 1090 | UL 1581 § 1100 FT2 | IEC 60332-2-2
chemical resistance	Good, application-related testing
Gasoline resistance	Good, application-related testing
Oil resistance	Good, application-related testing | DIN EN 60811-404
Bending radius (fixed)	5 x Outer diameter
Bending radius (dynamic)	10 x Outer diameter
Connection type 2	
Family construction form	free cable end
Color contact carrier	gray

De informatie in dit datablad is met de grootst mogelijke zorg samengesteld.
Aansprakelijkheid beperkt tot grove nalatigheid voor de juistheid, volledigheid en actualiteit. Status: 2024-04-24

No. of poles	13
Family construction form	M12
Gender	female
Color contact carrier	black
Coding	A
No. of poles	5
PIN 1	+
PIN 2	NC S 2
PIN 3	-
PIN 4	NO S 1
PIN 5	PE

De informatie in dit datablad is met de grootst mogelijke zorg samengesteld.
Aansprakelijkheid beperkt tot grove nalatigheid voor de juistheid, volledigheid en actualiteit. Status: 2024-04-24