**M12 male 0° / M12 female 90° A-cod. LED**

PUR 3x0.34 bk UL/CSA+drag ch. 25m

Male straight – female 90°
M12 – M12, 3-pole
2× LED (PNP), (NPN) on request
Art-No. 7005 - M12 Lite - (plastic hexagonal screw) on request
Plastic housings with good resistance against chemicals and oils.
The resistance to aggressive media should be individually tested for your application. Further details on request.
Further cable lengths on request.

Link to Product

**Illustration**

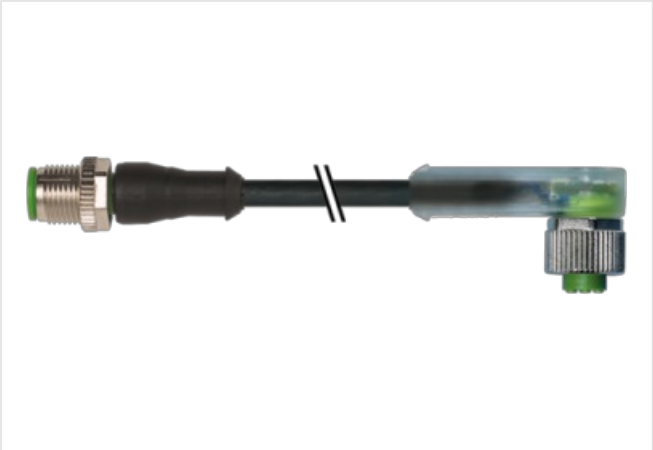

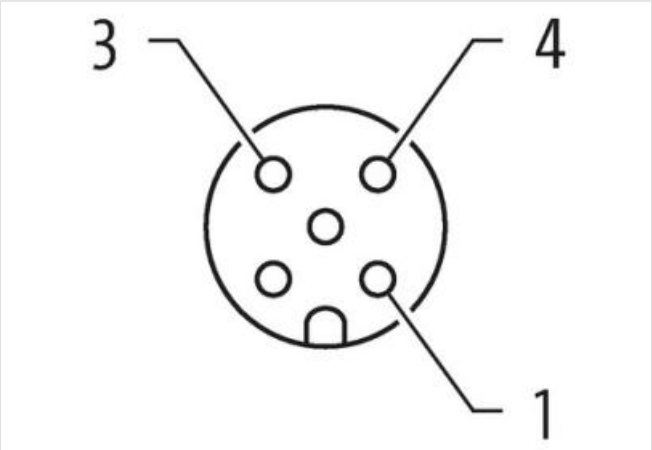


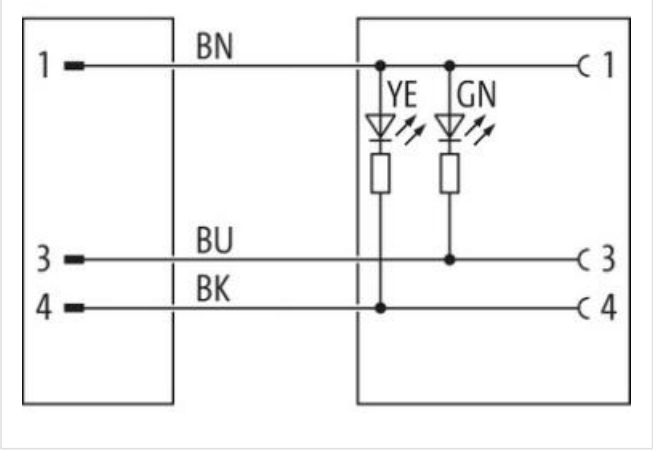


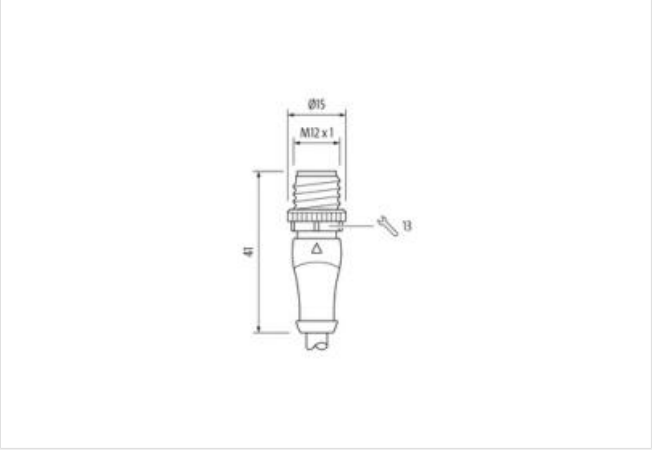


The information in this Product-PDF has been compiled with the utmost care.
Liability for the correctness completeness and topicality of the information is restricted to gross negligence. Version: 2024-04-25

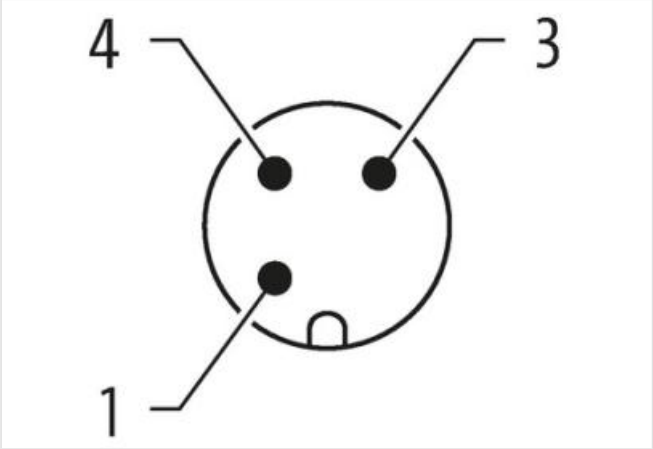


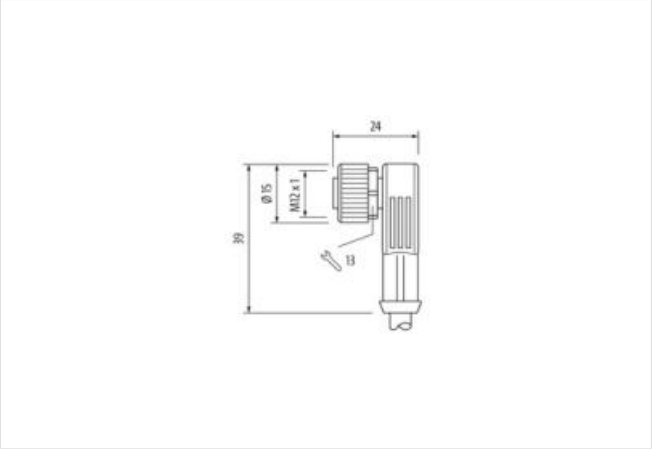


Product may differ from Image

| | |
|---|---|
| Cable length | 25 m |
| **Side 1** | |
| Tightening torque | 0,6 Nm |
| Mounting method | inserted, screwed |
| Family construction form | M12 |
| Thread | M12 x 1 |
| suitable for corrugated tube (internal Ø) | 10 mm |
| Material | PUR |
| Width across flats | SW13 |
| Degree of protection (EN IEC 60529) | IP65, IP66K, IP67 |
| **Side 2** | |
| Tightening torque | 0,6 Nm |
| Mounting method | inserted, screwed |
| Family construction form | M12 |
| Thread | M12 x 1 |
| suitable for corrugated tube (internal Ø) | 10 mm |
| Material | PUR |
| Width across flats | SW13 |
| **Commercial data** | |
| ECLASS-6.0 | 27279218 |
| ECLASS-7.0 | 27279218 |
| ECLASS-8.0 | 27279218 |
| ECLASS-9.0 | 27060311 |
| ECLASS-10.1 | 27060311 |
| ECLASS-11.1 | 27060311 |
| ECLASS-12.0 | 27060311 |
| ETIM-5.0 | EC001855 |
| customs tariff number | 85444290 |
| GTIN | 4048879324946 |
| Packaging unit | 1 |
| **Electrical data \| Supply** | |
| Operating voltage DC | 24 V |

The information in this Product-PDF has been compiled with the utmost care.
Liability for the correctness completeness and topicality of the information is restricted to gross negligence. Version: 2024-04-25

| | |
|---|---|
| Operating voltage DC min. | 18 V |
| Operating voltage DC max. | 30 V |
| Operating voltage DC max. (UL-listed) | 30 V |
| Current operating per contact max. | 4 A |
| **Diagnostics** | |
| Status indication LED | green, yellow |
| **Installation \| Connection** | |
| Mounting set | M12 x 1 |
| **Device protection \| Electrical** | |
| Additional condition protection degree | inserted, screwed |
| Pollution Degree | 3 |
| Rated surge voltage | 0,8 kV |
| Material group (IEC 60664-1) | I |
| **Mechanical data \| Material data** | |
| Coating locking | Nickeled |
| Coating of fitting | nickel plated |
| Locking material | Zinc die-casting |
| Material screw connection | Zinc die-casting |
| **Mechanical data \| Mounting data** | |
| Mounting method | inserted, screwed, Shaking protection |
| **Environmental characteristics \| Climatic** | |
| Operating temperature min. | -25 °C |
| Operating temperature max. | 85 °C |
| Additional condition temperature range | depending on cable quality |
| **Conformity** | |
| Product standard | DIN EN 61076-2-101 (M12) |
| **Installation \| Cable** | |
| Cable identification | 633 |
| Cable Type | 3 |
| Jacket Color | black |
| Type of Certificate | cURus |
| Amount stranding | 1 |
| Stranding | 3 wires twisted |
| wire arrangement | brown, black, blue |
| No. of bending cycles (C-track) | 10 Mio. @ 25 °C |
| Cable weigth | 29,7 g/m |
| Material jacket | PUR |
| Shore hardness jacket | 90 ± 5 Shore A |
| Freedom from ingredients (jacket) | lead-free, cadmium-free, CFC-free, halogen-free, silicone-free |
| Outer-diameter (jacket) | 4,1 mm |
| Tolerance outer diameter (sheath) | ± 5 % |
| Material wire insulation | PP |
| Amount wires | 3 |
| Outer diameter insulation | 1,25 mm |
| Outer diameter tolerance core insulation | ± 5 % |
| Shore hardness wire insulation | 70 ± 5 Shore D |
| Ingredient freeness wire insulation | lead-free, cadmium-free, CFC-free, halogen-free, silicone-free |
| Amount strands (wire) | 42 |
| Diameter of single wires | 0,1 mm |
| Conductor crosssection (wire) | 0,34 mm² |
| Material conductor wire | Stranded copper wire, bare |

The information in this Product-PDF has been compiled with the utmost care.
Liability for the correctness completeness and topicality of the information is restricted to gross negligence. Version: 2024-04-25

| | |
|---|---|
| Conductor type (wire) | strand class 6 |
| Traversing distance (C-track) | 10 m @ 25 °C \| horizontal |
| Current load capacity (standard) | to DIN VDE 0298-4 |
| Current load capacity min. wire | 6 A |
| Electrical resistance line constant wire | 57 Ω/km @ 20 °C |
| Nominal voltage power AC max. | 300 V |
| Power frequency withstand voltage power (wire - jacket) | 2,5 kV @ 60 s |
| AC withstand voltage power (wire - wire) | 2,5 kV @ 60 s |
| Min. operating temperature (static) | -40 °C |
| Max. operating temperature (fixed) | 80 °C / 90 °C @ 10000 h Operation |
| Operating temperature min. (dynamic) | -25 °C |
| Operating temperature max. (dynamic) | 80 °C / 90 °C @ 10000 h Operation |
| UV resistance | DIN EN ISO 4892-2 A |
| Flame resistance | UL 1581 § 1090 \| UL 1581 § 1100 FT2 \| IEC 60332-2-2 |
| chemical resistance | Good, application-related testing |
| Gasoline resistance | Good, application-related testing |
| Oil resistance | Good, application-related testing \| DIN EN 60811-404 |
| Bending radius (fixed) | 5 x Outer diameter |
| Bending radius (dynamic) | 10 x Outer diameter |
| No. of torsion cycles | 2 Mio. |
| Torsion speed | 35 cycles/min |
| Torsion stress | ± 180 °/m |

The information in this Product-PDF has been compiled with the utmost care.
Liability for the correctness completeness and topicality of the information is restricted to gross negligence. Version: 2024-04-25