MURR ELEKTRONIK
stay connected

VALVE PLUG SUPPRESSOR FORM BI - 11MM 90°

Diode and LED, 24VDC/50VA/W

24 V DC
Diode + LED
Remove plug gasket when fitting adapter. Other LED colors on request.
Polarity dependent
Note PIN arrangement (PE at cable outlet of connector). 180° turned version on request.

Link to Product

Illustration

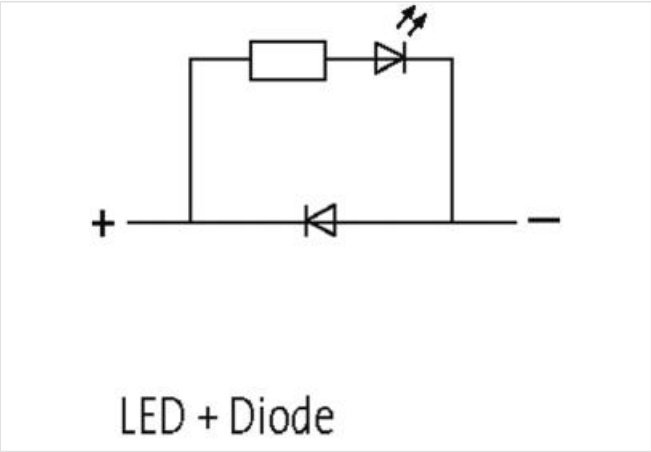

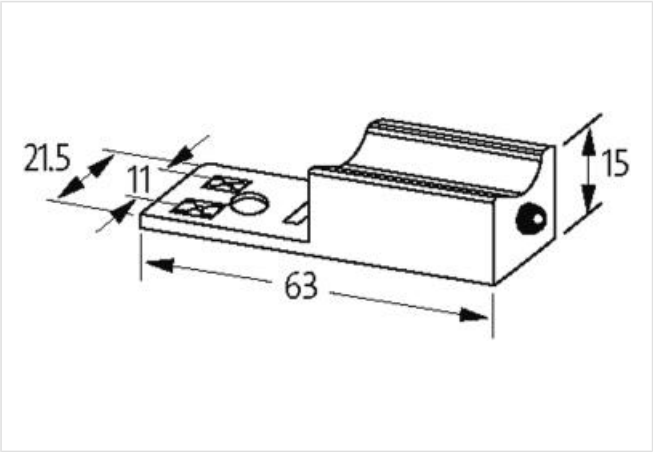

Product may differ from Image

Commercial data

ECLASS-6.0	27371013
ECLASS-6.1	27371013
ECLASS-7.0	27371013
ECLASS-8.0	27371013
ECLASS-9.0	27371013

The information in this Product-PDF has been compiled with the utmost care.
Liability for the correctness completeness and topicality of the information is restricted to gross negligence. Version: 2024-05-06

ECLASS-10.1	27371013
ECLASS-11.1	27371013
ECLASS-12.0	27371013
ETIM-5.0	EC000197
customs tariff number	85363010
GTIN	4048879012072
Packaging unit	1
Electrical data	
Capacity CX	200 ms
Holding power max.	50 W
Electrical data | Supply	
Cut-off peak voltage max.	1 V
Electrical data | Input	
Input voltage DC min.	12 V
Input voltage DC max.	32 V
Diagnostics	
Status indication LED	yellow
Device protection | Media	
Flame resistance	flame retardant
Mechanical data | Material data	
Coating contact	silver-plated
Color housing	black
Material housing	PA
Material contact	Bronze
Mechanical data | Mounting data	
Height	15 mm
Width	63 mm
Depth	21,5 mm
Environmental characteristics | Climatic	
Operating temperature min.	-20 °C
Operating temperature max.	60 °C
Housing temperature max. (EN 61347-2-13)	130 °C

The information in this Product-PDF has been compiled with the utmost care.
Liability for the correctness completeness and topicality of the information is restricted to gross negligence. Version: 2024-05-06