MURR ELEKTRONIK
stay connected

CUBE20S ANALOG INPUT MODULE AI2

2x16Bit TH 10 Parameter Bytes

Expansion module
AI2 - (E) TC 7 Byte
for thermo elements

Link to Product

Illustration

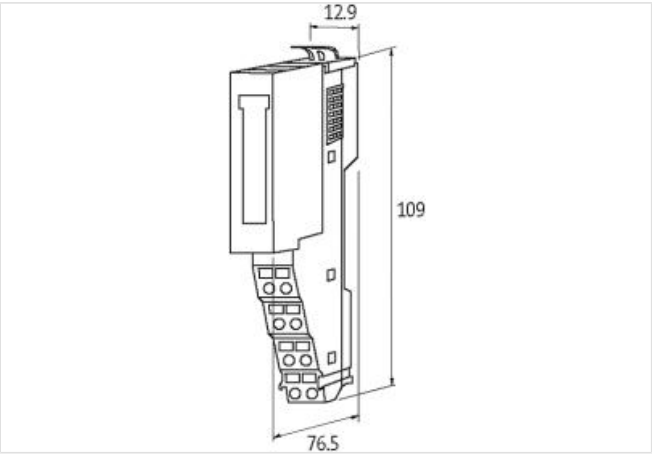

Product may differ from Image

Commercial data

ECLASS-6.0	27242601
ECLASS-6.1	27242601
ECLASS-7.0	27242601
ECLASS-8.0	27242601
ECLASS-9.0	27242601
ECLASS-10.1	27242601
ECLASS-11.1	27242601
ECLASS-12.0	27242601
ETIM-5.0	EC001596
customs tariff number	85389099
GTIN	4048879423571
Packaging unit	1

Electrical data | Supply

Operating voltage DC	24 V
Operating voltage DC min.	20,4 V
Operating voltage DC max.	28,8 V
Idle current external max.	30 mA
Current consumption max.	55 mA
module supply	via system connection

Electrical data | Input

Type input	E, B, C, J, K, L, N, R, S, T

The information in this Product-PDF has been compiled with the utmost care.
Liability for the correctness completeness and topicality of the information is restricted to gross negligence. Version: 2024-04-25

Conversion time analog input per channel	84,2 ms
Diagnostics	
Diagnostic	Under voltage
Diagnostic via BUS	per module
Diagnostic via LED	per module and channel
Short circuit diagnosis	yes
LED display	Ethernet connection/data traffic
Overload diagnosis	yes
Device protection | Electrical	
Degree of protection (EN IEC 60529)	IP20
Mechanical data | Mounting data	
Mounting method	geschnappt
Suitable for mounting type	mounting rail, (EN 60715)
Height	109 mm
Width	12,9 mm
Depth	76,5 mm
Environmental characteristics | Climatic	
Operating temperature min.	0 °C
Operating temperature max.	55 °C
Storage temperature min.	-20 °C
Storage temperature max.	85 °C
Connection type 2	
Connection type 1	Power
Connection type 2	Power
Connection	Spring clamp terminals FK
Family construction form	terminal
Gender	female
No. of poles	8
PIN 1	n.c.
PIN 2	24 V DC
PIN 3	0 V
PIN 4	24 V DC Sys
PIN 5	n.c.
PIN 6	24 V DC
PIN 7	0 V
PIN 8	0 V Sys
Connection	Spring clamp terminals FK
Family construction form	terminal
Gender	female
No. of poles	8
PIN 1	+ TC 0
PIN 2	- TC 0
PIN 5	+ TC 1
PIN 6	- TC 1

The information in this Product-PDF has been compiled with the utmost care.
Liability for the correctness completeness and topicality of the information is restricted to gross negligence. Version: 2024-04-25