Miro 6,2 Timer Off-delay max.0,1-10 sec.

MIRO 6.2 TIMER OFF-DELAY

Relay output
Switch-off delay: 0.1...10 s
Screw terminals
safe separation (EN 60947-1)

Link to Product

Illustration

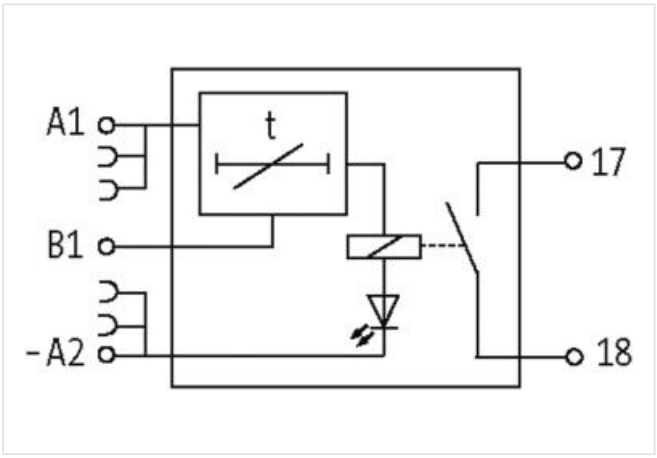

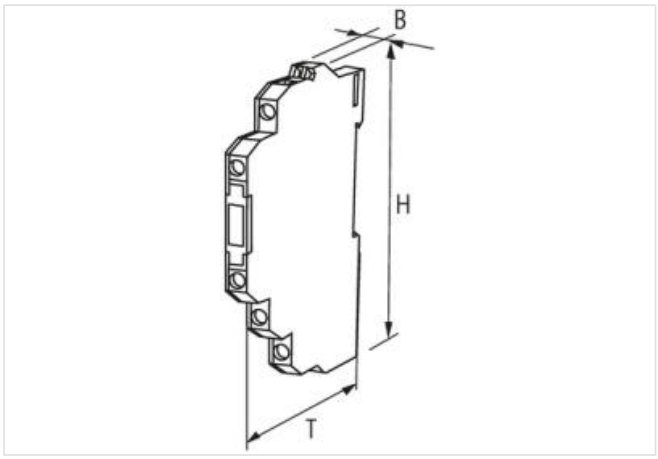

Product may differ from Image

Commercial data

ECLASS-6.0	27210990
ECLASS-6.1	27371790
ECLASS-7.0	27371790
ECLASS-8.0	27371605
ECLASS-9.0	27371605
ECLASS-10.1	27371605

The information in this Product-PDF has been compiled with the utmost care.
Liability for the correctness completeness and topicality of the information is restricted to gross negligence. Version: 2024-04-20

MURR ELEKTRONIK
stay connected

ECLASS-11.1	27371605
ECLASS-12.0	27371605
ETIM-5.0	EC001439
customs tariff number	85364900
GTIN	4048879026987
Packaging unit	1
Electrical data | Input	
Input voltage DC	24 V
Input voltage DC min.	20,4 V
Input voltage DC max.	26,4 V
Input current	20 mA
Input current DC max.	15 mA
Control voltage DC	24 V
Control voltage DC min.	20,4 V
Control voltage DC max.	26,4 V
Control current	5 mA
Electrical data | Output	
Output voltage adjustable	no
Output current max.	6 A
Utilization category AC-12 (EN IEC 60947-5-1)	6 A @ 24, 6 A @ 110 V, 6 A @ 230 V
Utilization category AC-15 (EN IEC 60947-5-1)	3 A @ 24 V, 3 A @ 110 V, 3 A @ 230 V
Utilization category DC-13 (EN IEC 60947-5-1)	1 A @ 24 V, 0,2 A @ 110 V, 0,1 A @ 230 V
Switching frequency max.	10 Hz
Power rating AC max.	1500 VA
Power rating DC max.	120 W
Switching voltage AC max.	240 V
Switching voltage DC max.	240 V
Switching current DC	100 mA
Device protection	
Condition lifetime	load-dependent
Device protection | Electrical	
Rated surge voltage	4 kV
Electrical lifetime	20000000 Cycles
Device protection | Mechanical	
Mechanical endurance	20000000 Cycles
Mechanical data	
Drop-out time max.	15 ms
Response time max.	10 ms
Bounce time max.	1,5 ms
Mechanical data | Material data	
Material contact	Ag Sn O2
Mechanical data | Mounting data	
Mounting method	geschnappt
Suitable for mounting type	mounting rail, (EN 60715)
Height	91 mm
Width	6,2 mm
Depth	71 mm
Environmental characteristics | Climatic	
Operating temperature min.	0 °C
Operating temperature max.	55 °C

The information in this Product-PDF has been compiled with the utmost care.
Liability for the correctness completeness and topicality of the information is restricted to gross negligence. Version: 2024-04-20

MURR ELEKTRONIK
stay connected

Connection type 5	
Connection	Screw terminals SK
Family construction form	terminal
Gender	female
Color contact carrier	green
No. of poles	1
PIN 1	+ A 1
Connection	Screw terminals SK
Family construction form	terminal
Gender	female
Color contact carrier	green
No. of poles	1
PIN 1	18
Connection	Screw terminals SK
Family construction form	terminal
Gender	female
Color contact carrier	green
No. of poles	1
PIN 1	17
Connection	Screw terminals SK
Family construction form	terminal
Gender	female
Color contact carrier	green
No. of poles	1
PIN 1	+ B 1
Connection	Screw terminals SK
Family construction form	terminal
Gender	female
Color contact carrier	green
No. of poles	1
PIN 1	- A 2

The information in this Product-PDF has been compiled with the utmost care.
Liability for the correctness completeness and topicality of the information is restricted to gross negligence. Version: 2024-04-20