MURR ELEKTRONIK
stay connected

MSUD double valve B-10mm with cable

PVC 4x0.75 gy 5m

Form B (10 mm)
24 V AC ±20% / DC ±25%
LED and suppression
Connection cable L = 150 mm
Further cable lengths on request.
Plastic housings with good resistance against chemicals and oils.
The resistance to aggressive media should be individually tested for your application. Further details on request.

Link naar het product

Afbeelding

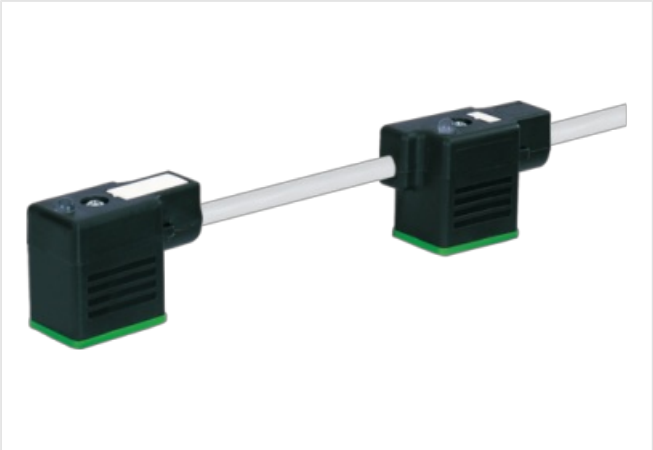

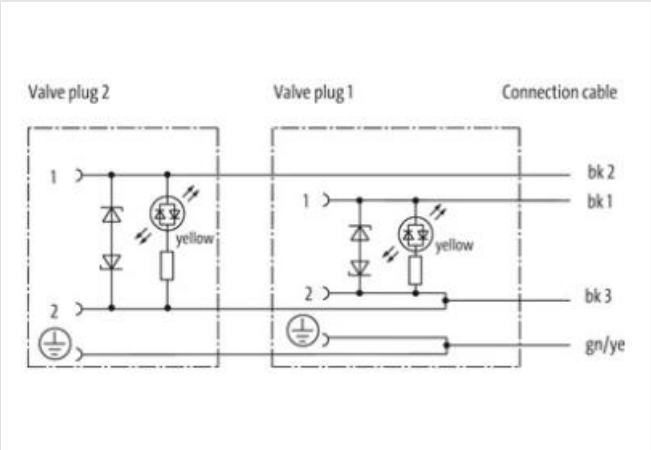

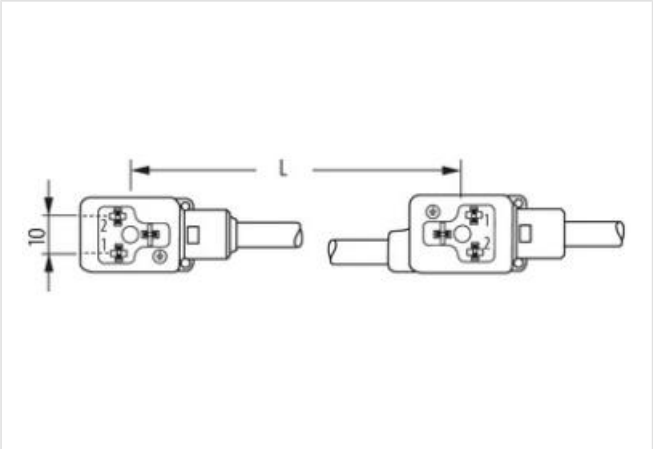

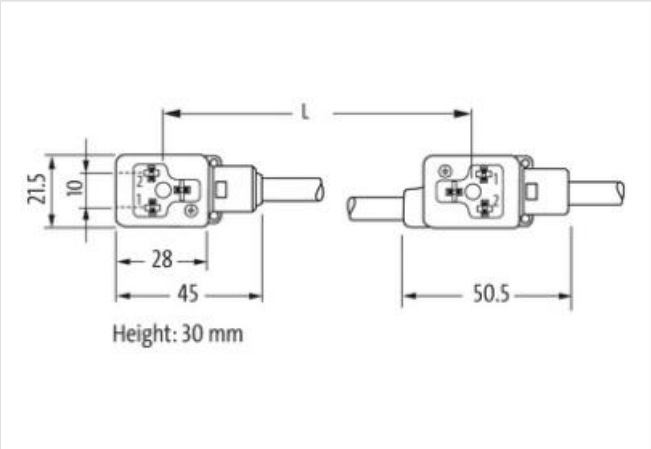

Product van afwijken van afbeelding

Cable length	5 m
Side 1	
Tightening torque	0,4 Nm

De informatie in dit datablad is met de grootst mogelijke zorg samengesteld.
Aansprakelijkheid beperkt tot grove nalatigheid voor de juistheid, volledigheid en actualiteit. Status: 2024-04-26

Thread	M3
Material	PBT
Side 2	
Tightening torque	0,4 Nm
Thread	M3
Material	PBT
Electrical data	
Capacity CX	20 ms
Electrical data | Supply	
Operating voltage AC	24 V
Operating voltage AC min.	19,2 V
Operating voltage AC max.	28,8 V
Operating voltage DC	24 V
Operating voltage DC min.	18 V
Operating voltage DC max.	30 V
Cut-off peak voltage max.	55 V
Current operating per contact max.	4 A
Current consumption max.	12 mA
Diagnostics	
Status indication LED	yellow
Device protection | Electrical	
Degree of protection (EN IEC 60529)	IP67
Additional condition protection degree	inserted, screwed
Rated surge voltage	0,8 kV
Mechanical data | Material data	
Color housing	black
Mechanical data | Mounting data	
Mounting method	inserted, screwed
Environmental characteristics | Climatic	
Operating temperature min.	-25 °C
Operating temperature max.	85 °C
Additional condition temperature range	depending on cable quality
Installation | Cable	
Cable identification	217
Cable Type	1
Printing color of wire insulation	white (isolation black)
Jacket Color	gray
Amount stranding	1
Stranding	4 wires twisted
wire arrangement	black 1, black 2, black 3, green-yellow
Cable weigth	75,9 g/m
Material jacket	PVC
Shore hardness jacket	80 ± 5 Shore A
Freedom from ingredients (jacket)	lead-free, cadmium-free, CFC-free, silicone-free
Outer-diameter (jacket)	6,5 mm
Tolerance outer diameter (sheath)	± 5 %
Material wire insulation	PVC
Amount wires	4
Outer diameter insulation	1,8 mm
Outer diameter tolerance core insulation	± 5 %
Shore hardness wire insulation	43 ± 5 Shore D

De informatie in dit datablad is met de grootst mogelijke zorg samengesteld.
Aansprakelijkheid beperkt tot grove nalatigheid voor de juistheid, volledigheid en actualiteit. Status: 2024-04-26

Material properties wire insulation	good machinability
Ingredient freeness wire insulation	lead-free, cadmium-free, CFC-free, silicone-free
Printing color of wire insulation	white (isolation black)
Amount strands (wire)	24
Diameter of single wires	0,2 mm
Conductor crosssection (wire)	0,75 mm²
Material conductor wire	Stranded copper wire, bare
Conductor type (wire)	Strand class 5
Current load capacity (standard)	to DIN VDE 0298-4
Current load capacity min. wire	9,6 A
Electrical resistance line constant wire	26 Ω/km @ 20 °C
Max. rated voltage power (conductor - ground)	300 V
Max. rated voltage power (conductor - conductor)	500 V
Power frequency withstand voltage power (wire - jacket)	3 kV @ 60 s
AC withstand voltage power (wire - wire)	3 kV @ 60 s
Min. operating temperature (static)	-30 °C
Max. operating temperature (fixed)	70 °C
Operating temperature min. (dynamic)	-5 °C
Operating temperature max. (dynamic)	70 °C
Flame resistance	UL 1581 § 1090 | IEC 60332-2-2 | UL 1581 § 1100 FT2
chemical resistance	Good, application-related testing
Gasoline resistance	Good, application-related testing
Oil resistance	DIN EN 60811-404 | Good, application-related testing
Bending radius (fixed)	5 x Outer diameter
Bending radius (dynamic)	10 x Outer diameter
Commerciële gegevens	
Douane tarief nummer	85444290
GTIN	4065909088326
Verpakkingseenheid	1

De informatie in dit datablad is met de grootst mogelijke zorg samengesteld.
Aansprakelijkheid beperkt tot grove nalatigheid voor de juistheid, volledigheid en actualiteit. Status: 2024-04-26